発行整理番号 Issue NO. :	T1DN-02008
発 行 日 Date of Issue :	2002年4月23日 April 23,2002
発 行 区 分 Classification:	■ 新規 New □ 変更 Change □ 更新 Renewal

DIGI－KEY　御中

納 入 仕 様 書
PRODUCT SPECIFICATION FOR INFORMATION

製 品 名 称 Product Description	: Common mode choke coil
製 品 品 番 Product Part Number	: ELKU＊＊＊FB
松 下 品 番 Matsushita Part Number	: ELKU＊＊＊FB
適用(使用機種等) Applications	: 一般電子機器

上記以外の適用に際しては,事前に弊社担当者までご連絡ください。
For other applications,contact our person signed below.

製 造 部 署 Manufactured by	: MATUSHITA ELECTRONIC COMPONENTS CO.,LTD
本仕様書の有効期間 Term of Validity	: 発行日から 2007年4月22日 April 22,2007 まで有効とします。 from the date of issue

お得意様ご使用欄 CUSTOMER USE ONLY

この書類を確かに受領しました。
This was certainly received by us.

松下電子部品株式会社
LCRデバイスカンパニー
コイルストラテジックビジネスユニット
Matsushita Electronic Components Co.,Ltd.
LCR Device Company
Inductive Products Strategic Business Unit
〒668-0298 兵庫県 出石郡出石町 田多地1番地
1,Tadachi, Izushi, Hyogo, 668-0298 Japan
電話(代表) (0796) 52-3181
Tel (0796) 52-3181(Representative)

発行部署名 Prepared by
但馬松下電器株式会社
Tajima Matsushita Electric Co., Ltd.
Tel (0796)52-3181
Fax (0796)52-5706

責任者 Approved	検印 Checked	担当者 Designed
T. Yoshigawa		S. Nishimura

1.　この製品の使用材料は、「化学物質の審査及び製造等の規制に関する法律」に基き、すべて既存化学物質として記載されている材料です。

All the materials used in this product are registered material under the Law Concerning the Examination and Regulation of Manufacture, etc. of Chemical Substances.

2.　本製品は、モントリオール議定書で規制されているオゾン層破壊物質(ODC)を製造工程及び購入部品・材料で一切使用していません。

This product has not been manufactured with any ozone depleting chemical controlled under the Montreal Protocol.

3.　この製品に使用している全ての材料には、臭素系特定難燃物質「PBBOs、PBBs」を含有しておりません。

All the materials used in this product contain no brominated materials of PBBOs or PBBs as the flame-retardant.

4.　納入仕様書の「有効期間」について
有効期間は、特に、申し出のない限り(お客様の要望を含み)自動更新とします。
その際、連絡書・仕様書は、発行致しません。

"The Term of Validity" of Product Specifications for Information
Unless otherwise requested (including from customer), the term of validity shall be renewed automatically.
Then , informations and specifications shall be not issued.

SPECIFICATIONS	151 - ELKU - 1 - 10 - E
Common Mode Choke Coil	7 − 1

1 . SCOPE

This specification covers the chip type Common Mode Choke Coil to be delivered to DIGI−KEY

2 . PART NUMBER OF PRODUCTS

The part number of the products in this specification shall be ELKU * * * F B -
1 2 3 (4)

No.	DIVISION
1	Common Mode Impedance (101=100 ohm 181=180 ohm)
2	Package form (F =Embossed carrier taping)
3	Order of planning from A
(4)	Customer's code

3 . TEST CONDITION

The ambient temperature shall be 5℃ to 35℃ and the relative humidity 35% to 85% unless otherwise specified.
When the test result is doubtful,the sample in question shall be tested again at 20±2℃,65±5% RAH.

4 . VISUAL,DIMENSIONS AND CONSTRUCTION

As specified in the [151-ELKU-2-10-E]

5 . ELECTRICAL AND RELIABILITY CHARACTERISTICS

As specified in the [151-ELKU-3-10-E ,4-10-E]

6 . TEST METHOD

As specified in the [151-ELKU-5-10-E]

7 .PACKAGE

The products shall be packed so as not allow from water absorption and damage.
The following indications shall be marked on the package:
1 .Part Number 2 .Quantity 3 . Lot Number 4 .Manufacture's name
Packaging style and dimension are specified in the [151-ELKU-6-10-E ,7-10-E]

8. OPERATING TEMPERATURE RANGE

-20～+85℃

9. OTHERS

Reflow soldering only.
The customer is requested to store the products at the normal temperature (-5 ℃ to 35℃) and the normal humidity (85% RH max) in the packages we supplied.
The package shall not be exposed to direct sunlight and harmful gas and care should be taken so as not cause to dew.
Lead free condition is showed page 7-5.

10.REVISION

No.	Date	Reg.No.	Description	Page	Check

Notes

Approval	Check	Design
T.Yodugawa		S.Nishimura

SPECIFICATIONS	151 - ELKU - 2 - 10 - E
Common Mode Choke Coil	7 − 2

[VISUAL AND DIMENSIONS]

(unit: mm ...not to scale)

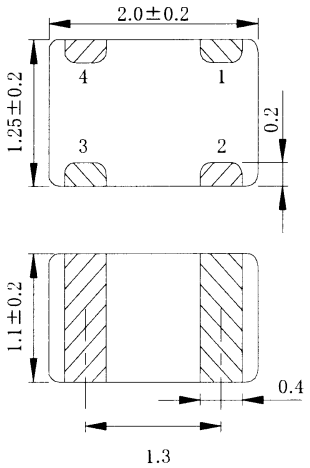

EQUIVALENT CIRCUIT

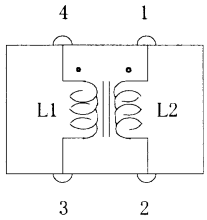

RECOMMENDED LAND PATTERN

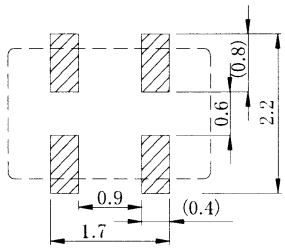

[CONSTRUCTION]

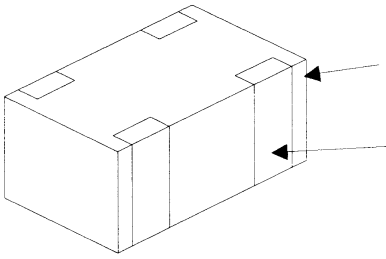

PART NAME	MATERIALS	
Body	Ferrite	
Inductor (L1,L2) terminal	Base	Ag
	Middle	Ni
	Outside	Sn

Notes

SPECIFICATIONS	151 - ELKU - 3 - 10 - E
Common Mode Choke Coil	7 − 3

[ELECTRICAL CHARACTERISTICS]

Customer's Part No.	Matsushita Part No.	Common mode impedance(at100MHz) typ. (ohm typ.)	min. (ohm min.)	Rated current (per one L) (A max.)	Rated voltage (between L1 and L2) (V max.)	Reference Rdc (ohm max.)
	ELKU101FB	100 ohm typ.	70 ohm min.	0.1Amax.	10Vmax.	1.1 ohm max.
	ELKU181FB	180 ohm typ.	126 ohm min.			
	ELKU271FB	270 ohm typ.	189 ohm min.			

[RELIABILITY CHARACTERISTICS 1/2]

CMC:Common Mode Choke coil

ITEM	SPECIFICATION	TEST METHOD／CONDITION
Temperature characteristic	1.Common mode impedance shall not change more than ±30%	−20～85℃ standard : Values at 20℃
Dielectric with-standing voltage	1.There shall be no evidence of short or open circuit	10V DC 1 minute between terminals and ferrite body
Damp heat (steady state) Humidity (steady state)	1. There shall not be body deformation or change in appearance. 2. Common mode impedance shall not change more than ±30%	CMC shall be subjected to 90～95%RH at 60℃±2℃ for 500±8 hours. Measurements shall be made after 48hours stabilized at room temperature.
Change of Temperature (Temperature shock)		CMC shall be subjected 100 times to the following temperature cycle. (1)-40℃ 30 minutes (2)85℃ 30 minutes. Measurements shall be made after 48hours stabilized at room temperature.
Dry heat /High Temperature		CMC shall be subjected to 85±2℃ for 500±8hours. Measurements shall be made after 48 hours stabilized at room temperature.
Cold /Low Temperature		CMC shall be subjected to -40±2℃ for 500±8 hours. Measurements shall be made after 48 hours stabilized at room temperature.
Endurance (Dry heat)	1. There shall not be body deformation or change in appearance. 2. Common mode impedance shall not change more than ±30%	With rated current and voltage applied,CMC shall be subjected to 85±2℃ for 500±8 hours. Measurements shall be made after 48 hours stabilized at room temperature.
Endurance (Damp heat, steady state)		With rated current and voltage applied,CMC shall be subjected to 90～95%RH at 60±2℃ for 500±8 hours. Measurements shall be made after 48 hours stabilized at room temperature.

Common Mode Choke Coil

[RELIABILITY CHARACTERISTICS 2/2]

CMC:Common Mode Choke coil

ITEM	SPECIFICATION	TEST METHOD／CONDITION
Solderability	The terminal shall be at least 90 % coverd with solder.	After fluxing, CMC shall be dipped in a melted solder bath at 230±5 ℃ for 2±0.5 seconds. (Solder : H63A)
Resistance to soldering heat	1.There shall not be body deformtion or change in appearance.	After a 150±10 ℃ preheat cycle for 1 minutes,CMC shall be dipped in a melted solder bath at 270±5 ℃ for 10±0.5 seconds. (Solder : H63A)
Vibration (Low frequency)	2.Common mode impedance shall not change more than ±30 %	Apply vibration at changing frequencies 10～55Hz per 60 seconds,with an amplitude of 1.5mm to the X,Y and Z directions for 2 hours each.The body is fixed to a PC board by terminals soldering.
Free fall		CMC shall be dropped 10 times from a height of 1m onto a wooden borad.
Bend strength	Shall not be disconection	The 5 cycle load shall be applied on a PCB which is soldered CMC and it is bent 2mm then it returns to original position. 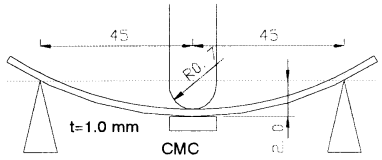

[REFLLOW SOLDERING]

Infrared reflow soldering :
This type of reflow soldering at first shall be conducted from 130℃ to 150℃preheat for 60 to 180 seconds,successively for up to 60 seconds in electrode temperature ranges of 200℃ or more, and for no more than 5 seconds at apeak temperature of 235℃.

Temperature Profile,Typical

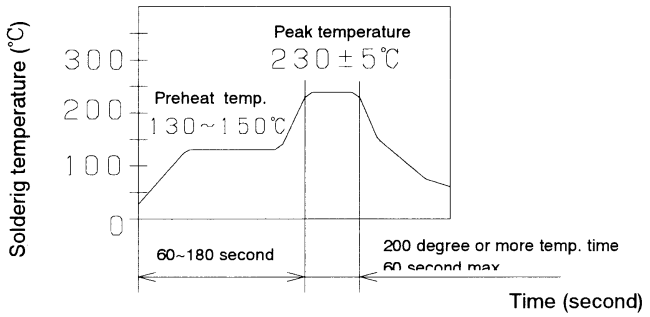

[LEAD FREE REGISTANCE OF REFLLOW SOLDERING]

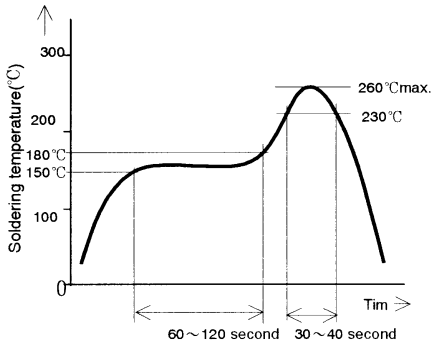

[LEAD FREE SOLDEBILITY OF REFLLOW SOLDERING]
Lead free solder is Sn-3.0Ag-0.5Cu

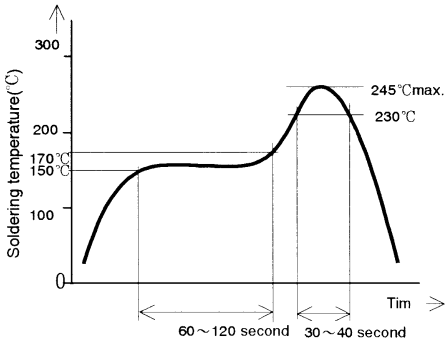

[MEASUREMENT METHOD OF ELECTRICAL CHARACTERISTICS]

Measurement of Common Mode Impedance with impedance analyzer HP4291A or equivalent.

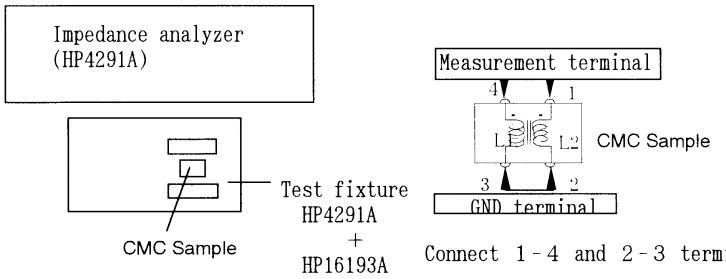

[PACKAGING]

TAPING

Embossed carrier tape (8mm width,4mm pitch) and 178mm diameter reel shall be employed as per JIS C 0806.

1. QUANTITY PER REEL

3,000 pcs.

There shall not be more empty pockets than two and those pockets shall not be consecutive.

2. PACKAGING

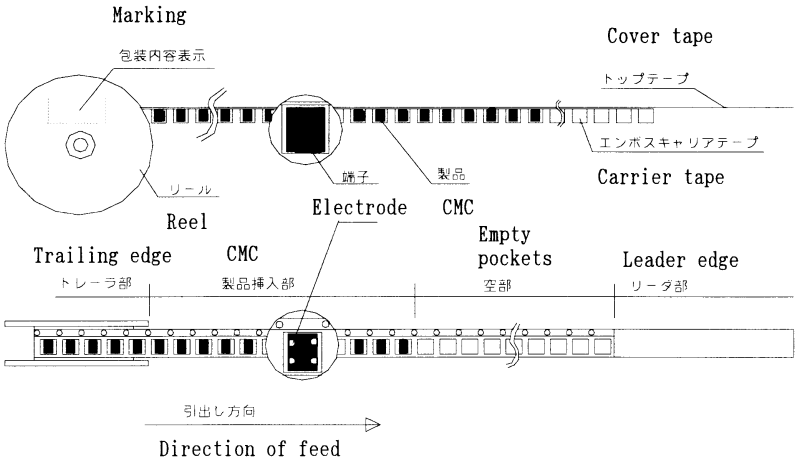

2 − 1 As show above,there shall be a leading edge consisting of 25 empty pockets as well as cover tape and a trailing edge consisting of 10 or more empty pockets.

2 − 2 CMC(Common Mode Choke Coil) shall be packaged and electrodes shall be vertical to the longitude of the pockets.

2 − 3 CMC shall be oriented as specified on the above illustration.

3. MARKING

Customer's part No,our part No,quantity and manufactuer's name shall be marked on the reel label.

4. COVER TAPE PEEL STRENGHTHT AND TEST METHOD

The cover tape peel strength shall be 0.098N ～0.68N (10g～70g) when measured as shown below.

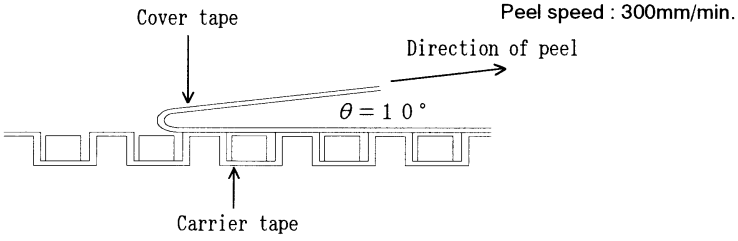

5. CARRIER TAPE DIMENSIONS

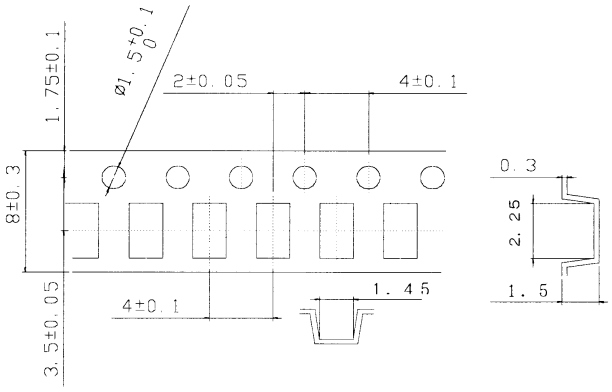

6. REEL DIMENSIONS

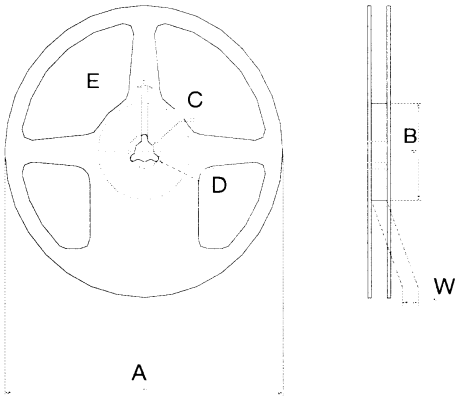

	UNIT
A	Φ178±2.0
B	Φ60±0.5
C	13.0±0.5
D	21.0±0.8
E	2.0±0.5
W	9.0±0.3

(unit ; mm)