Alle Rechte vorbehalten/ *All rights reserved*

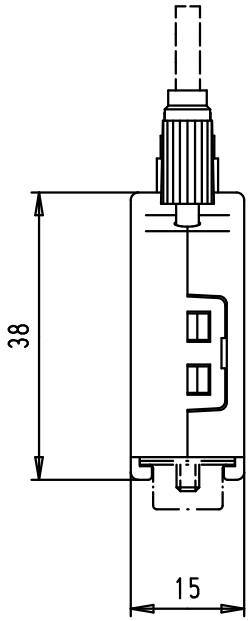

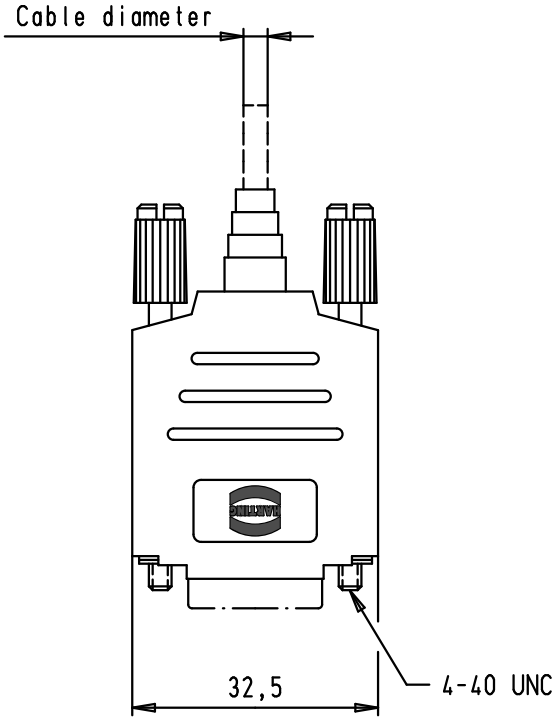

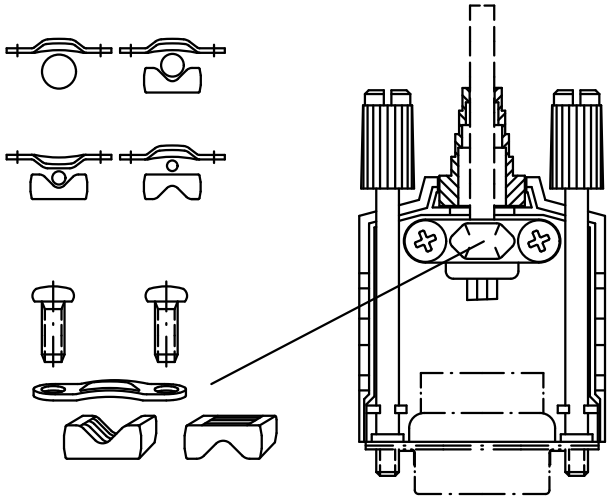

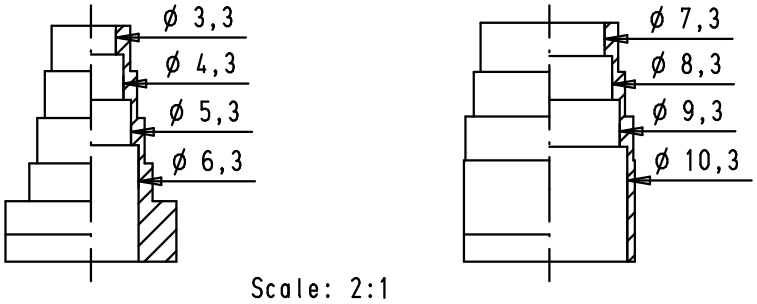

Maximum cable outer diameter without grommet: 11,5 mm

				Dat.	Name
			Detail.	28/03/02	CV
			Insp.		
34784	12/02/08	PK	Stand.		
32346	24/10/04	TR			
29760	28/03/02	CV			
Mod.	Dat.	Name			

All Dim. in mm
Orig. Size DIN A 4

D-Sub, top entry hood
with knurled screws,
9 poles,
thermoplastic metallized

Maßstab/ *Scale*
1:1
2:1

HARTING EURL
F-95972 Paris

TB 09 67 009 0425

Sub.

Blatt/ *Page*
1/1