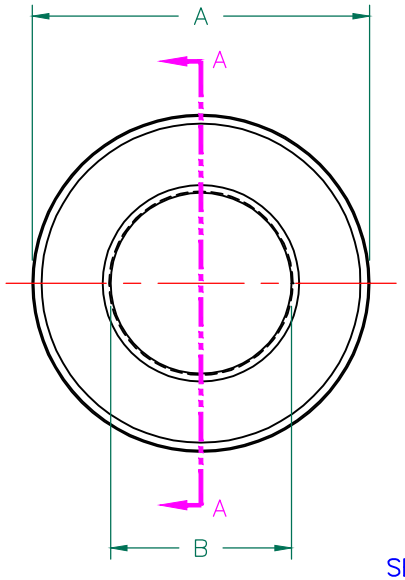

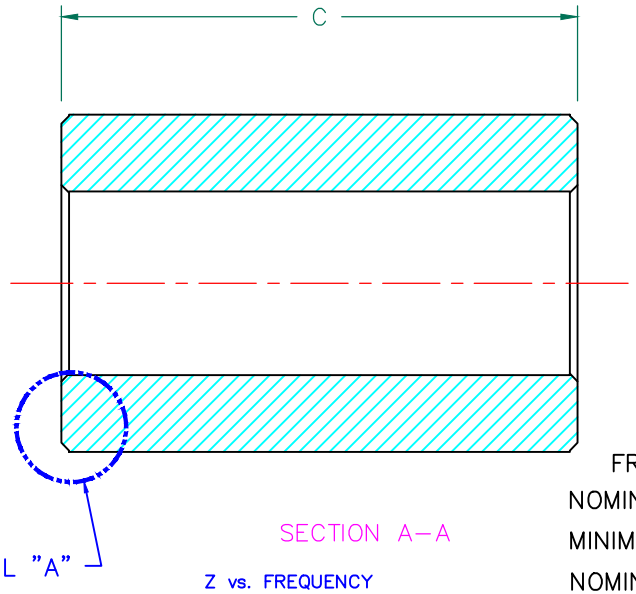

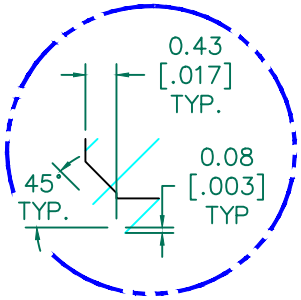

DETAIL "A"
CHAMFER
SCALE=10:1

Z vs. FREQUENCY
1 TURN, 2, AND 3 TURNS
(REF. ONLY)

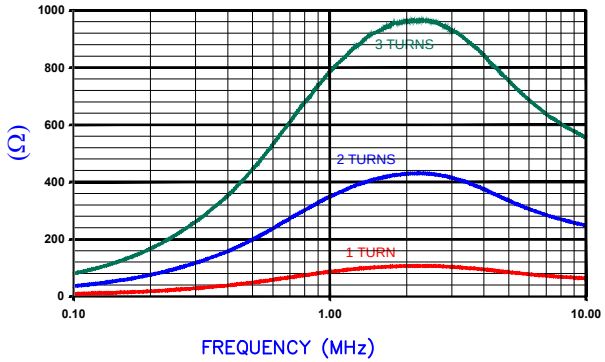

AGILENT E4991A RF Impedance/Material Analyzer
HP 16092A Test Fixture REF# 2607

SCALE DRAWING 1:1

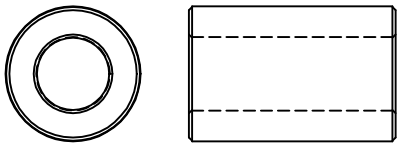

LFB187102–000

UNCONTROLLED DOCUMENT

IMPEDANCE (Z) NET SEE NOTE 1

FREQUENCY	500 KHz	1 MHz	5 MHz
NOMINAL (REF.) 1 TURN	53 Ω	91 Ω	84 Ω
MINIMUM (SPEC.) 1 TURN	– Ω	68 Ω	– Ω
NOMINAL (REF.) 2 TURNS	200 Ω	350 Ω	330 Ω
NOMINAL (REF.) 3 TURNS	430 Ω	780 Ω	770 Ω

TEST CRITERIA

METER	HP4396A OR EQUIVALENT
FIXTURE	HP16092A OR EQUIVALENT

NOTES: UNLESS OTHERWISE SPECIFIED

1. NET IMPEDANCE IS IMPEDANCE OF THE FERRITE CORE ONLY. ALL IMPEDANCE CONTRIBUTION FROM TEST WIRE AND FIXTURES HAS BEEN REMOVED.
2. COSMETIC SPECIFICATION REFER TO WI–QA–038.

FERRITE CORE DIMENSIONS (SPEC):

A	18.67 [.735]	±	0.38 [.015]
B	10.16 [.400]	±	0.38 [.015]
C	28.58 [1.125]	±	0.51 [.020]

WEIGHT/1000 26.06 kgs [57.46 Lbs]

DIMENSIONS ARE IN mm [INCHES].

REV	DESCRIPTION	DATE	INT
E	UPDATE THE LOGO	06/19/15	QIU
D	UPDATE COMPANY LOGO	07/13/08	TMB
C	REMOVE MIN SPEC @ 500 KHz	02/10/06	JRK
B	ADJUST TOLERANCES ADD TEST REF #	12/27/04	JRK
A	ORIGINAL DRAFT	09/27/02	TMB

This print is the property of Laird Tech. and is loaned in confidence subject to return upon request and with the understanding that no copies shall be made without the written consent of Laird Tech. All rights to design or invention are reserved.

Laird

PROJECT/PART NUMBER:	REV	PART TYPE:	DRAWN BY:
LFB187102–000	E	FERRITE CORE	TMB

DATE:	SCALE:	MATERIAL:
09/27/02	3:1	LF
CAD # LFB187102–000–E	TOOL # B0735	